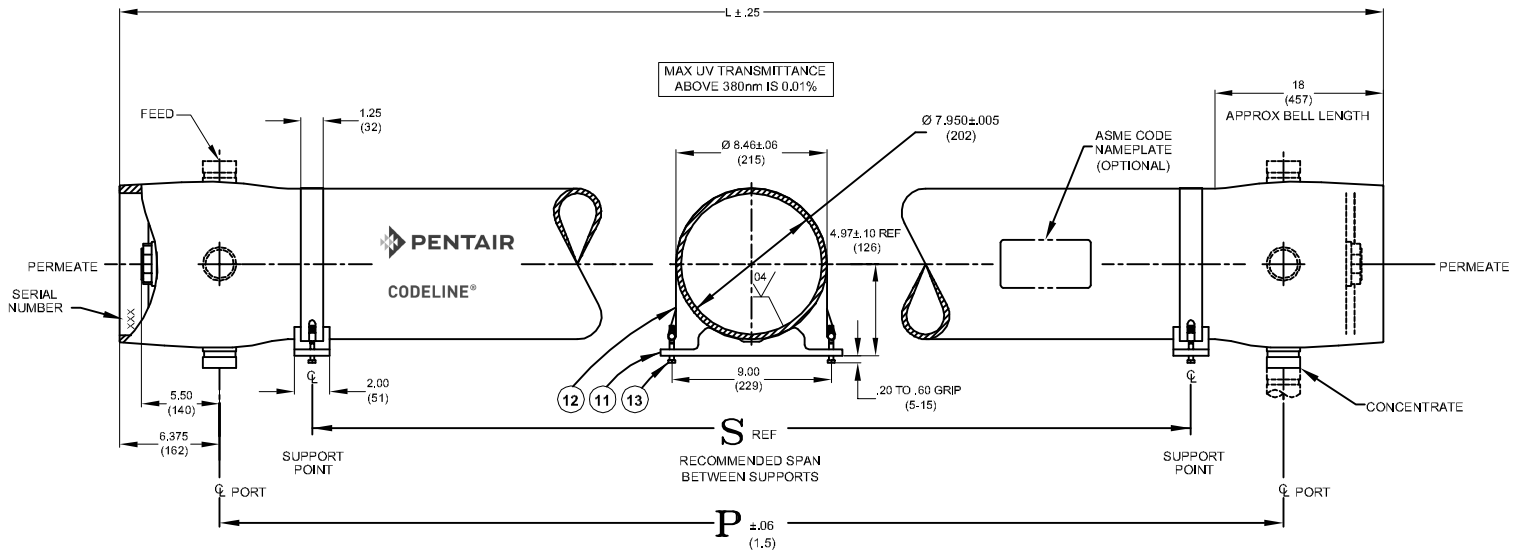

VIEW AT CENTER SUPPORT

CENTER VESSEL ON 2 OR 3 SUPPORTS
AT SPAN(S) "S" : 3 SUPPORTS REQUIRED
FOR LENGTHS -4 AND ABOVE

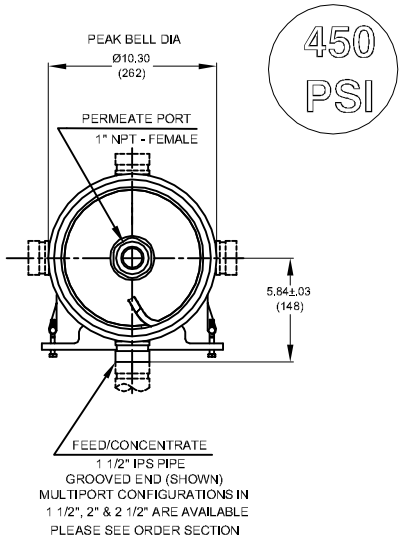

DWG REF	QTY	PART NUMBER	DESCRIPTION	MATERIAL
SHELL				
1	1	ORDER SECTION	SHELL	Filament Wound Epoxy/Glass composite - Head locking grooves integrally wound in place.
2	A/R		F/C Port	CF3M *
3	A/R		F/C Port Seal	Ethylene Propylene.
HEAD				
4	2	96157	Bearing Plate	6061-T6 Aluminium alloy - Hard anodized
5	2	96160	Sealing Plate	Engineering Thermoplastic.
6	2	96162	Permeate Port	Engineering Thermoplastic.
7	2	45066	Port Nut	Engineering Thermoplastic.
8	2	96000	Head Seal	Ethylene Propylene - O - Ring
9	2	45312	Perm Port Seal	Ethylene Propylene - O - Ring
HEAD INTERLOCK				
10	2	47336	Quick Release Spiral Ring	316 Stainless Steel.
VESSEL SUPPORT				
11	2+	52169	Saddle	Engineering Thermoplastic.
12	2+	45042	Strap Assy.	304 Stainless Steel-PVC Cushion.
13	4	46265	Strap screw.	5/16-18 UNC, 18-8 Stainless Steel.
ELEMENT INTERFACE				
14	2	A/R	Adapter	Engineering Thermoplastic.
15	2	52245	Adapter seal	Ethylene Propylene - O - Ring
16	4	A/R	PWT Seal	Ethylene Propylene - O - Ring
17	1	96163	Thrust Cone	Engineering Thermoplastic.

+3 each furnished with length code 4,5,6,7 & 8.

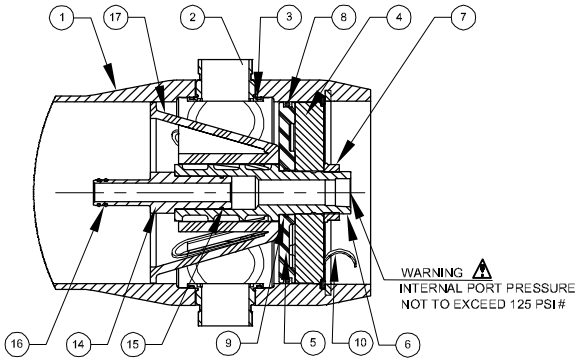

SECTION THROUGH END CLOSURE

NOTES:-
- MAX. ANGULAR VARIATION BETWEEN ANY PORTS ±0.5°.
- DIMENSION IN INCHES (MM APPROX.)
- SHELL EXTERIOR COATED WITH WHITE, HIGH GLOSS POLYURETHANE PAINT.
- ITEM 17 DOWNSTREAM ONLY
- NOT TO BE USED FOR CONSTRUCTION UNLESS CERTIFIED.

* GRADE CF3M PER ASME SA-351.
\# 450 PSI FOR METALLIC PERMPORTS
FOR OPTIONAL PART NUMBERS REFER PAGE 3
** WEIGHTS GIVEN IN THE TABLE ARE FOR HIGHEST CONFIGURATION AND WILL VARY WITH CHANGE IN CONFIGURATION.

CAUTION: INCORRECT MANIFOLDING WILL CAUSE SEVERE LOCAL STRESS AROUND PORT AND MAY RESULT IN LEAKS AND PREMATURE FAILURE; TAKE EVERY PRECAUTION LISTED ON REVERSE, SEE INSTALLATION INSTRUCTIONS FOR FURTHER DETAILS

PO NUMBER	
CUSTOMER NAME	
PROJECT NAME	
TOTAL QUANTITY	

PORT CONFIGURATION DETAILS	
PORT CONFIG	VESSEL QUANTITY

Dash Length	L IN(MM)	P IN(MM)	S IN(MM)	Approx Weight LB(KG)**
-1	59.75 (1518)	47 (1194)	20X1 (502)	75 (34)
-2	99.75 (2534)	87 (2210)	56X1 (1422)	95 (43)
-3	139.75 (3550)	127 (3226)	80X1 (2032)	115 (52)
-4	179.75 (4566)	167 (4242)	64X2 (1626)	137 (62)
-5	219.75 (5582)	207 (5258)	78X2 (1981)	161 (73)
-6	259.75 (6598)	247 (6274)	92X2 (2337)	181 (82)
-7	299.75 (7614)	287 (7290)	106X2 (2692)	201 (91)
-8	339.75 (8630)	327 (8306)	120X2 (3048)	223 (101)

PENTAIR
CODELINE®

MODEL - 80S45
MEMBRANE HOUSING

DRAWN DATE	PGS 14 NOV 06	ECN 3452	DWG. NO. 99161	REV. M
CHECKED DATE	MD 14 NOV 06	DATE 10APR15	SCALE NONE	SIZE A3	SHEET 1 OF 3
APPROVED DATE	PSC 14 NOV 06			

RATING:

DESIGN PRESSURE……..450 PSIG at 190°F (3.1 MPa at 88°C)
MIN. OPERATING TEMP……..……..20°F (-7°C)
FACTORY TEST PRESSURE…. …675 PSIG/ 495 PSIG (4.65 MPa)/(3.41 MPa)

QUALIFICATION PRESSURE ……..…...2700 PSI (18.62 MPa)

INTENDED USE:

The CodeLine 80S45 Fiberglass RO Pressure Vessel is designed for continuous, long term use as housing for reverse osmosis membrane elements to desalt typical brackish waters at pressures up to 450 psi. Any make of eight-inch nominal diameter spiral-wound element is easily accommodated; the appropriate interfacing hardware for the element specified is furnished with the vessel.

The CodeLine 80S45 is designed in accordance with the engineering standards of the Boiler and Pressure Vessel Code of the American Society of Mechanical Engineers (ASME) as per Section X. At small additional cost vessels can be inspected during construction by an ASME Authorized Inspector and ASME Code stamped.

The CodeLine 80S45 must be installed, operated and maintained in accordance with the listed precautions and good industrial practice to assure safe operation over a long service life.

The high performance Filament wound FRP shell must be allowed to expand under pressure; undue restraint at support points or piping connections can cause leaks to develop in the shell. This side-ported vessel requires special precautions in mounting and connection to piping so that the vessel will not be subjected to excessive stress due to bending moments acting at the side openings in the fiberglass shell. The end closure, incorporating close fitting, interlocking metal components, must be kept dry and free of corrosion; deterioration can lead to catastrophic mechanical failure of the head.

Pentair will assist the purchaser in determining the suitability of this standard vessel for their specific operating conditions. The final determination however, including evaluation of the standard material of construction for compatibility with the specific corrosive environment, shall be the responsibility of the purchaser. Alternate materials with enhanced corrosion resistance are available on special order.

Specifications are subject to change without notice.

PRECAUTIONS:

DO…read, understand and follow all instructions; failure to take every precaution will void warranty and may result in vessel failure
DO…mount the shell on horizontal members at span "S" using compliant vessel supports furnished; Shim saddles if required. Tighten hold down straps just snug
DO…align and center side ports with the manifold header. Correct, causes of misalignment in a row of vessels connected to the same header
DO…use flexible type IPS grooved-end pipe couplings, at side ports; allow full, 0.125 inch gap between port and piping, and position piping to maximize flexibility of connection.
DO…provide flexibility in, and support for piping manifolds so that vessel can grow in length under pressure without undue restraint; provide additional flexible joints in large pipes leading to manifold header.
DO…provide overpressure protection for vessel set at not more than 105% of design pressure
DO…inspect end closures regularly; replace components that have deteriorated and correct causes of corrosion
DO… Lubricate seals sparingly, using nonpetroleum Based lubricants, i.e. Parker Super O-lube®, Glycerin or suitable silicone based lubricants.

DO NOT…work on any component until first verifying that pressure is relieved from vessel
DO NOT…make rigid piping connections to ports or clamp vessel in any way that resists growth of fiberglass shell under pressure;
***ΔDIA = 0.015 in. (0.4mm) and
***ΔL = 0.2 in. (6mm) for a length code –8 vessel
DO NOT… hang piping manifolds from ports or use vessel in any way to support other components
DO NOT…tighten Permeate Port connection more than one turn past hand tight
DO NOT… operate vessel without connecting both Permeate Ports internally to complete set of elements or otherwise plug ports internally so that external piping connection is not subjected to feed pressure
DO NOT…install Spacer on downstream end of vessel
DO NOT…operate vessel without Thrust Cone installed downstream
DO NOT…pressurize vessel until double-checking to verify that the Locking Ring is in place and fully seated.
DO NOT…operate vessel at pressure and temperature in excess of its rating.
DO NOT…operate vessel with permeate pressure in excess of 125 psi at 190°F (0.86 Mpa at 88.^{0}C).
DO NOT…tolerate leaks or allow end closures to be routinely wetted in any way
DO NOT…operate outside the pH range 3-11.

For complete information on proper use of the vessel
Please refer to the 80S Series USER'S GUIDE 94182.

ORDERING:

Using the chart below, please check the features you require

VESSEL LENGTH CODE – please check one

MODEL 80S45 ☐ -1 ☐ -2 ☐ -3 ☐ -4 ☐ -5 ☐ -6 ☐ -7 ☐ -8

MEMBRANE BRAND AND MODEL

❑ Please supply adapters for the following membrane brand and specific model
Brand_____ Model_____

CERTIFICATION REQUIRED

☐ Hydro testing at 1.1 times the design pressure.
☐ ASME Stamped and National Board Registered.
☐ In compliance with the ASME Sec X but not Code Stamped.

☐ Hydro testing at 1.5 times the design pressure.
☐ CE Marked Standard.
☐ Certified by Pentair

ADAPTER KITS	
UP STREAM	**DOWN STREAM**

PERMEATE PORT SELECTION

Serial Number End

Size of the Permeate Port ☐ **1"** ☐ 1.25" ☐ 1.5"
Type of Connection ☐ **FNPT** ☐ MNPT ☐ BSPTM ☐ BSPTF ☐ IPS GROOVED ☐ SANITARY
Material of Construction ☐ **Noryl** ☐ SS316L ☐ Zeron 100

Non Serial Number End

Size of the Permeate Port ☐ **1"** ☐ 1.25" ☐ 1.5"
Type of Connection ☐ **FNPT** ☐ MNPT ☐ BSPTM ☐ BSPTF ☐ IPS GROOVED ☐ SANITARY
Material of Construction ☐ **Noryl** ☐ SS316L ☐ Zeron 100

Note:

- Standard offering is 1.0" FNPT in Noryl.
- 1.25" & 1.5" BSPTF, 1.25" & 1.5" FNPT and 1.25" SANITARY connections cannot be offered
- Sanitary permeate port cannot be offered in Noryl

STRAP ASSEMBLY

☐ **Standard SS304** ☐ Optional SS316 ☐ Optional SS316L

FEED/CONCENTRATE PORT SELECTION

Material of Construction ☐ **Standard CF3M** ☐ Optional Duplex SS (CD3MN)
☐ Optional Super Duplex SS (CD3MWCuN)

Configuration ☐ **Standard - CF3M 1D5D**
☐ Optional –Multi port: (Refer SPEC.SHEET/PM/1.5"-3" for Multi ports selection).
2.5" Ports not available in 90° Configuration.

Serial number end ☐ ☐ ☐ ☐ ☐ ☐ ☐ ☐
Opposite end ☐ ☐ ☐ ☐ ☐ ☐ ☐ ☐

PORT SIZE CODE	
D	1½" GROOVED END
E	2" GROOVED END
F	2½" GROOVED END

BEARING PLATE MATERIAL

☐ **Standard – 6061 T6 Aluminium**

☐ Optional – Stainless Steel 316L

Note: Please refer to 99321 for sanitary details and refer page-3 for optional Part numbers.

BEARING PLATE PART NUMBERS		
PERMEATE PORT SIZE	ALUMINIUM	SS316L # #
1.0"/1.25"	**96157**	96476
1.5"	96411	97373

SEALING PLATE PART NUMBERS	
Standard used for Aluminium BP	**96160**
Optional used for SS316L BP	96477

PERM PORT RETAINER RING & PORT NUT PART NUMBERS		
1.0" / 1.25"	Standard Port nut	**45066**
1.5"	Port Retainer Ring	45247

STRAP ASSEMBLY PART NUMBERS		
SS304	SS316	SS316L
45042	46926	94371

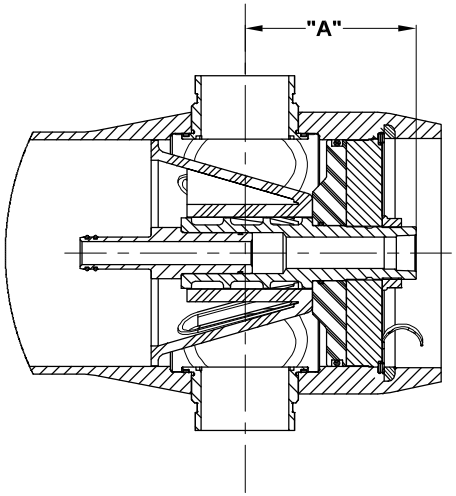

SECTION THROUGH END CLOSURE

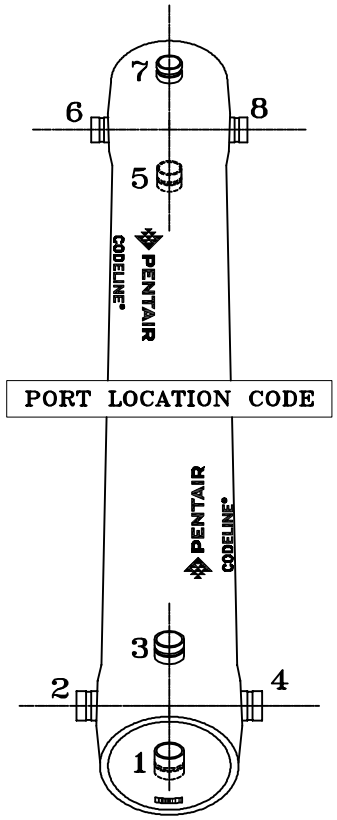

Serial Number End

CODELINE BODY LABELS ARE PLACED AT 90° TO SERIAL NUMBER END AND AT 270° ON THE OPPOSITE SIDE END

F/C PORT & SEAL PART NUMBER				
SIZE	*CF3M	**CD3MN	***CD3MWCuN	SEAL
1.5"	**98024**	97353	96507	**96077**
2.0"	98025	97357	96643	96078
2.5"	98026	97364	96556	96079

PERMEATE PORT PART NUMBERS & PERMPORT TO F/C PORT OFFSET DISTANCE

SIZE	MATERIAL	FNPT		MNPT		BSPTF		BSPTM		IPS GROOVED	
		PART NUMBER	DIM "A"	PART NUMBER	DIM "A"	PART NUMBER	DIM "A"	PART NUMBER	DIM "A"	PART NUMBER	DIM "A"
1.0"	NORYL	96162	5.508	97659	6.508	96301	5.508	97660	6.508	97661	6.808
	SS316L # #	96752	5.508	97347	6.508	97351	5.508	97355	6.508	97322	6.808
	#ZERON 100	97349	5.508	97348	6.508	97352	5.508	97356	6.508	97293	6.808
1.25"	NORYL	NA	NA	97655	6.508	NA	NA	97360	6.508	97662	6.808
	SS316L # #	NA	NA	96487	6.508	NA	NA	97362	6.508	97311	6.808
	#ZERON 100	NA	NA	97359	6.508	NA	NA	97363	6.508	97365	6.808
1.5"	NORYL	NA	NA	97663	6.108	NA	NA	97369	6.108	97656	6.738
	SS316L # #	NA	NA	97368	6.108	NA	NA	97371	6.108	97449	6.738
	#ZERON 100	NA	NA	97292	6.108	NA	NA	97372	6.108	97374	6.738

NOTES

DIMENSION IN INCHES (MM APPROX.)

* GRADE CF3M PER ASME SA-351.

** GRADE CD3MN AS PER ASME SPEC SA-995 (UNS-J92205)

*** GRADE CD3MWCuN AS PER ASME SPEC SA-995 (J 93380)

GRADE ZERON 100 AS PER ASME SPEC SA-479.

GRADE SS-316L AS PER ASME SPEC SA-479.

PENTAIR
CODELINE®

DRAWN	PDM 27 JUN 11	MEMBRANE HOUSING MODEL - 80S45			
CHECKED	RD 27 JUN 11	DATE 10APR15	DWG. NO. 99161		REV. M
APPROVED	RM 27 JUN 11	ECN 3452	SCALE NONE	SIZE A3	SHEET 3 OF 3